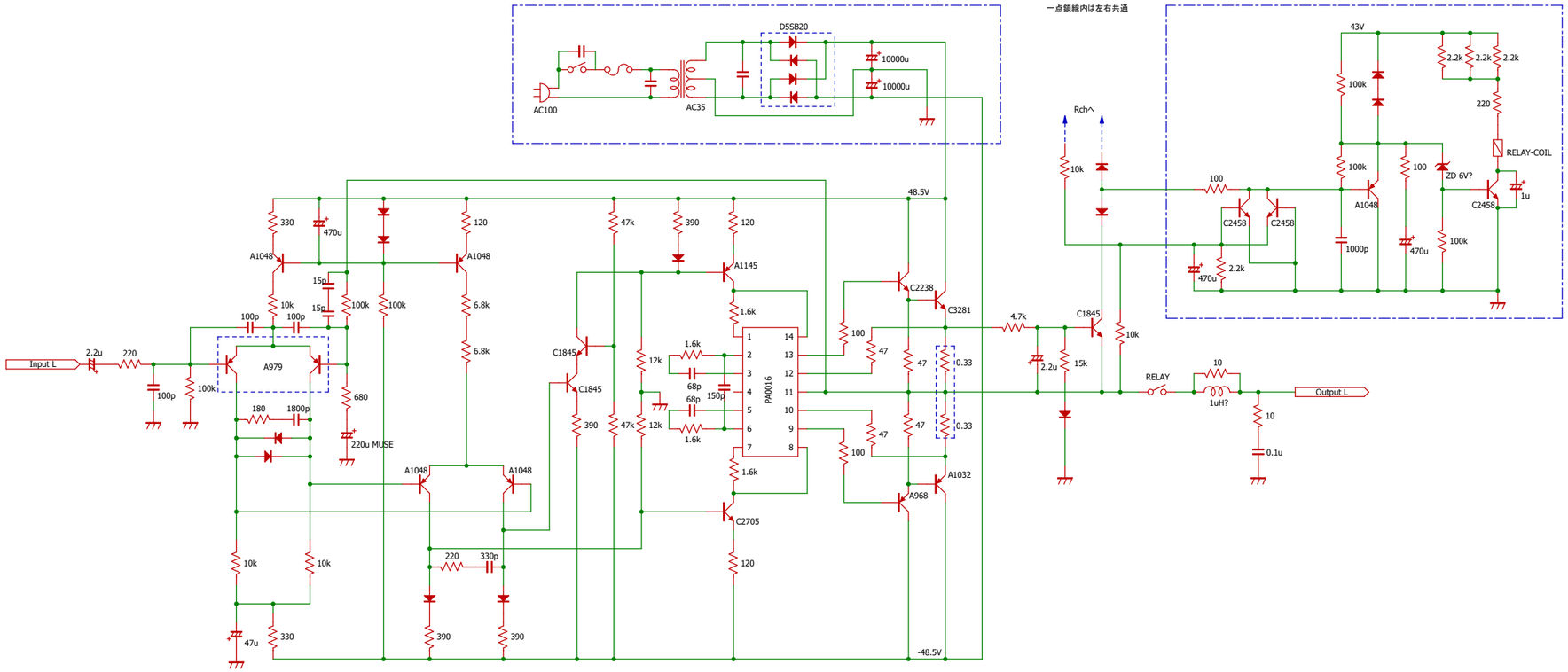

Pioneer A-535 Main Amp

https://plastic-audio.com